FRONT SEAT ASSEMBLY (for RH Side)

COMPONENTS

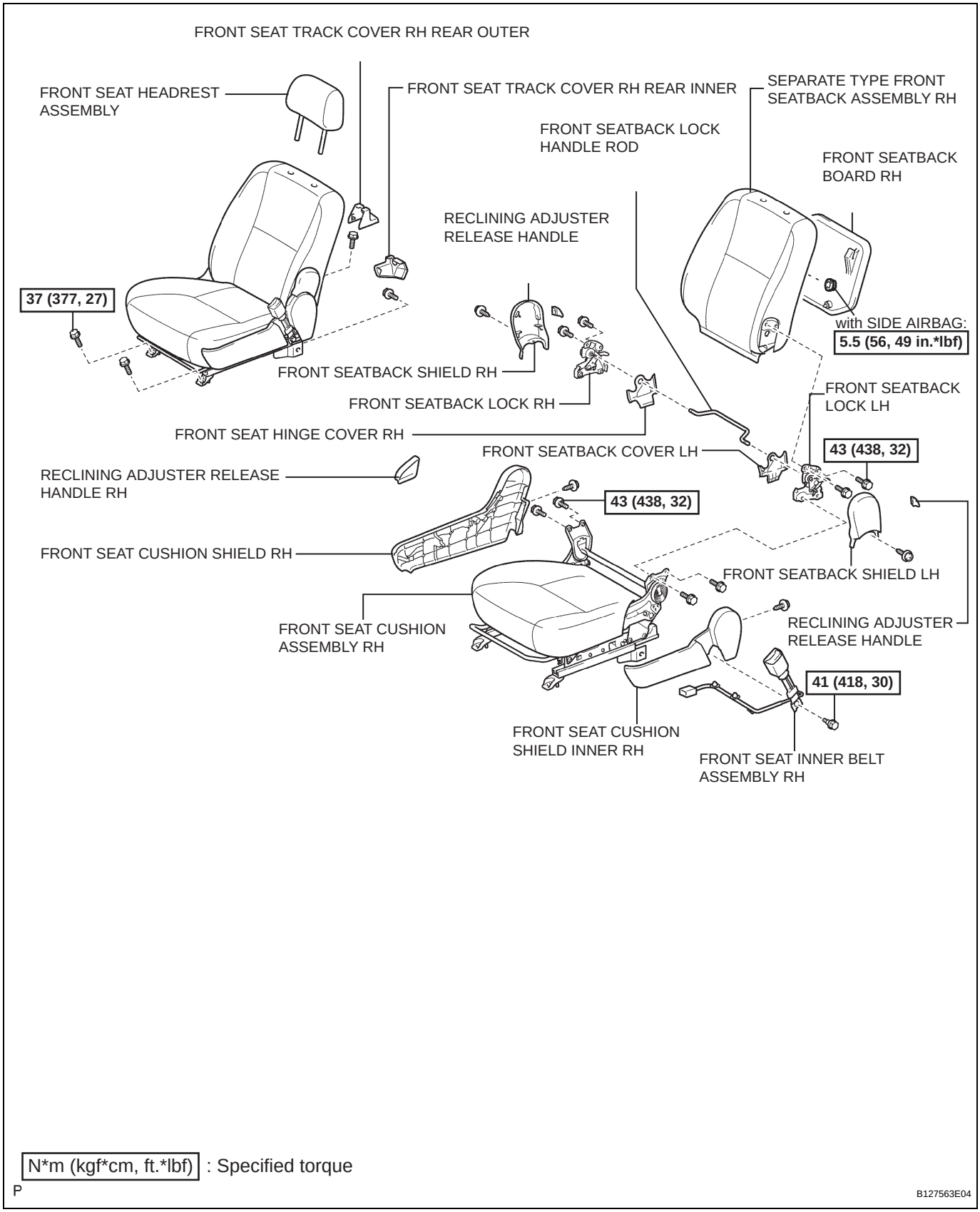

SE

cardiagn.com

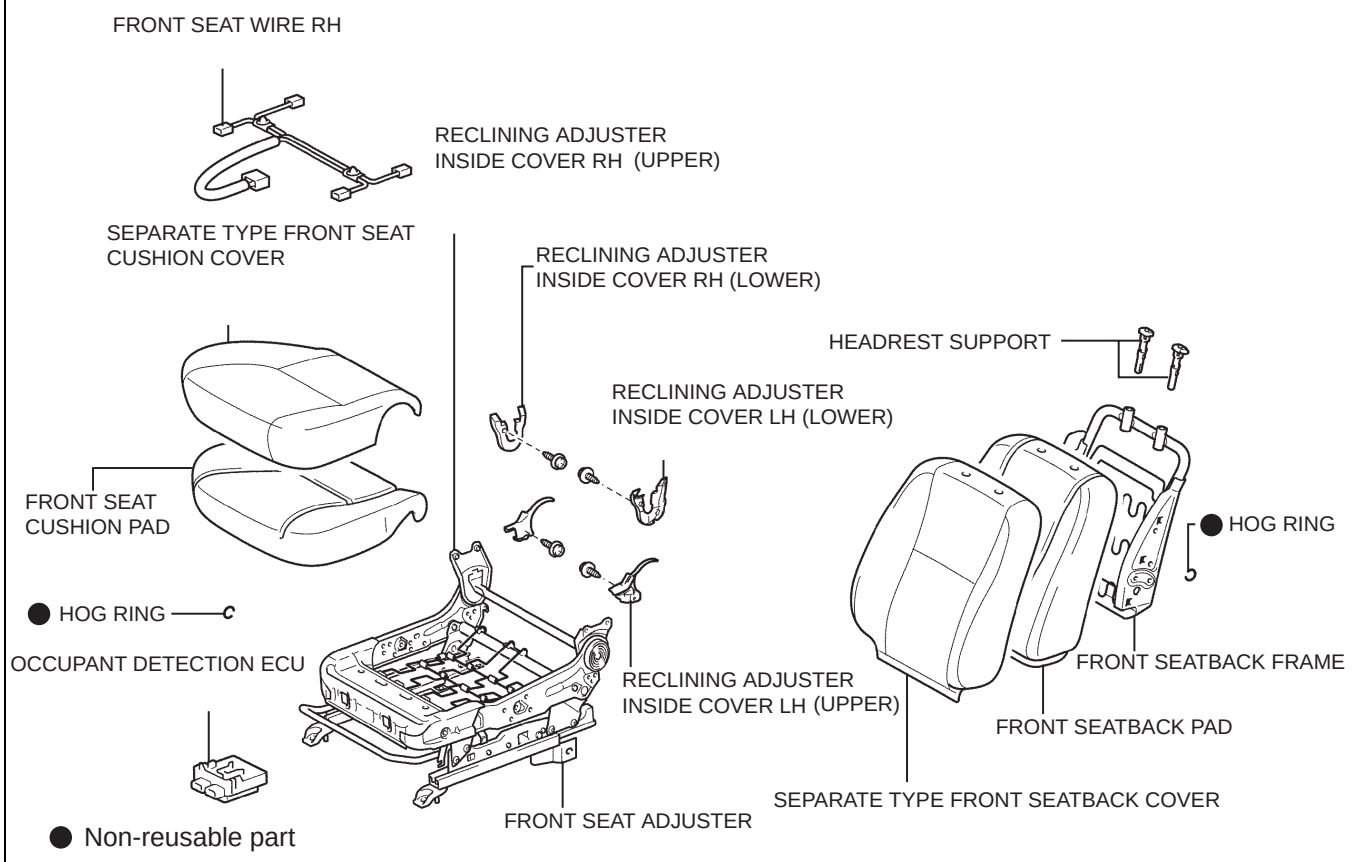

obrdiagn.com